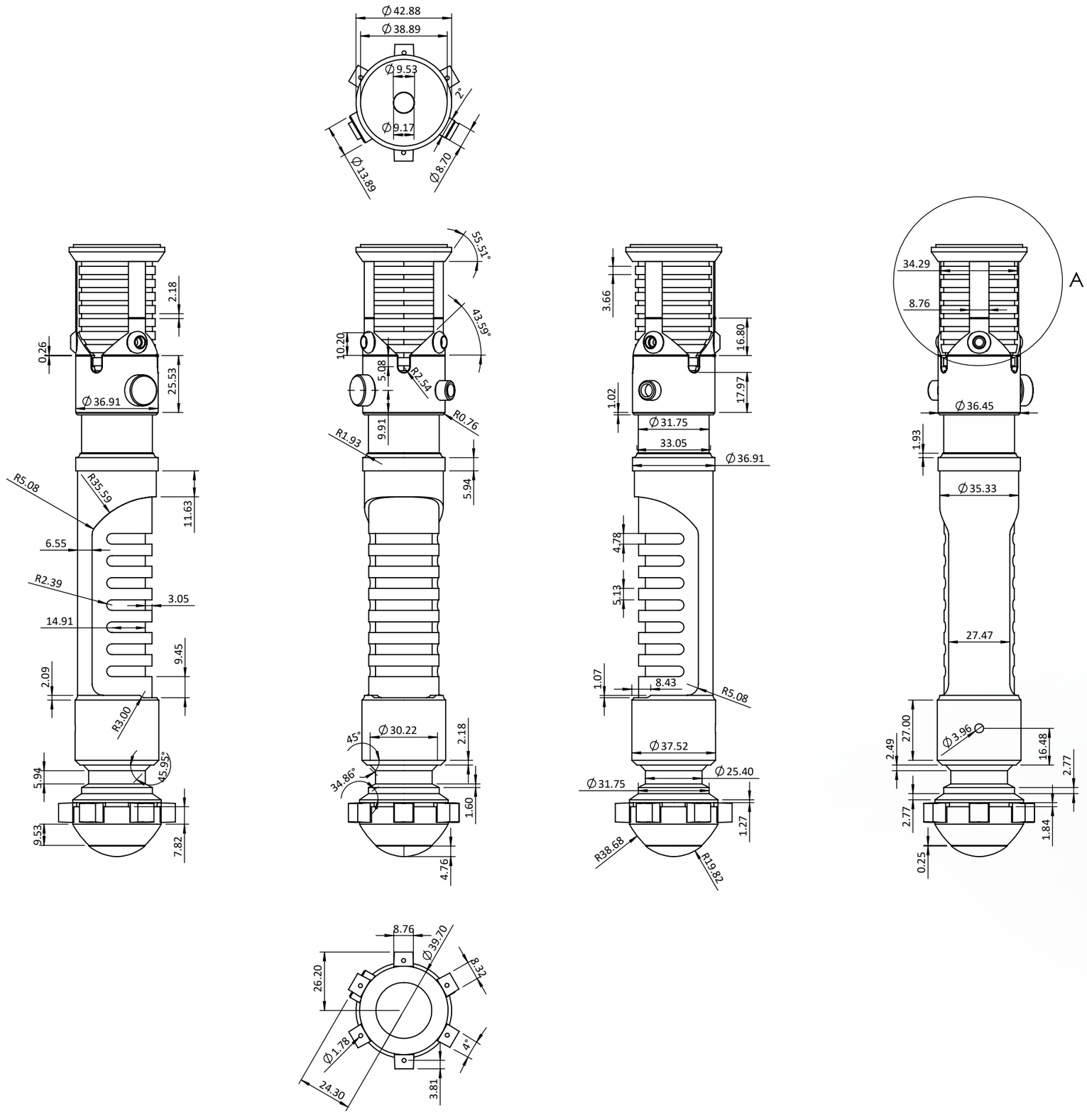

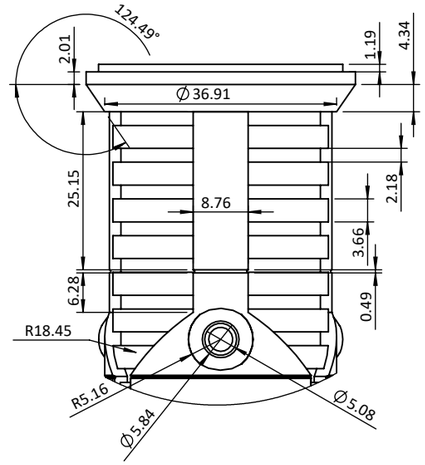

DETAIL A
SCALE 1 : 1

DRAWN BY: GLENN CONDON	DATE: 09/Jan/23
SCALE: (mm) 1:2	Obi-Wan Hilt